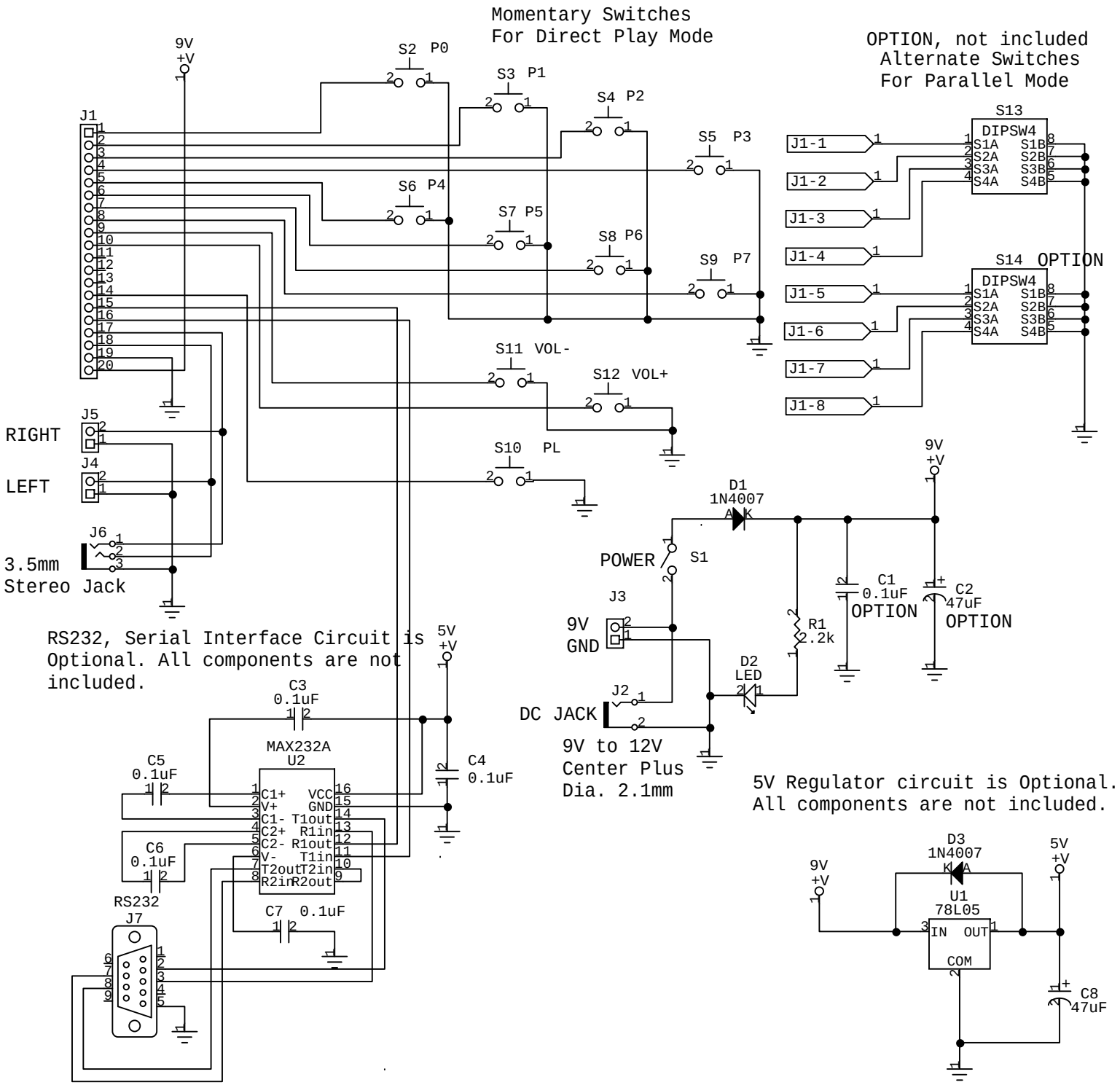
Momentary Switches
For Direct Play Mode
OPTION, not included
Alternate Switches
For Parallel Mode
9V
+V
S2 P0
S3 P1
S4 P2
S5 P3
S6 P4
S7 P5
S8 P6
S9 P7
S11 VOL-
S12 VOL+
S10 PL
J1
S13
DIPSW4
S1A S1B
S2A S2B
S3A S3B
S4A S4B
J1-1
J1-2
J1-3
J1-4
J1-5
J1-6
J1-7
J1-8
S14 OPTION
RIGHT
J5
LEFT
J4
J6
3.5mm
Stereo Jack
D1
1N4007
A K
POWER
S1
J3
9V
GND
J2
DC JACK
9V to 12V
Center Plus
Dia. 2.1mm
D2
LED
R1
2.2k
C1
0.1uF
OPTION
C2
47uF
OPTION
RS232, Serial Interface Circuit is
Optional. All components are not
included.
5V
+V
C3
0.1uF
C4
0.1uF
C5
0.1uF
C6
0.1uF
MAX232A
U2
C1+ VCC
V+ GND
C1- T1out
C2+ R1in
C2- R1out
V- T1in
T2out T2in
R2in R2out
C7 0.1uF
RS232
J7
5V Regulator circuit is Optional.
All components are not included.
D3
1N4007
K A
U1
78L05
IN OUT
COM
C8
47uF