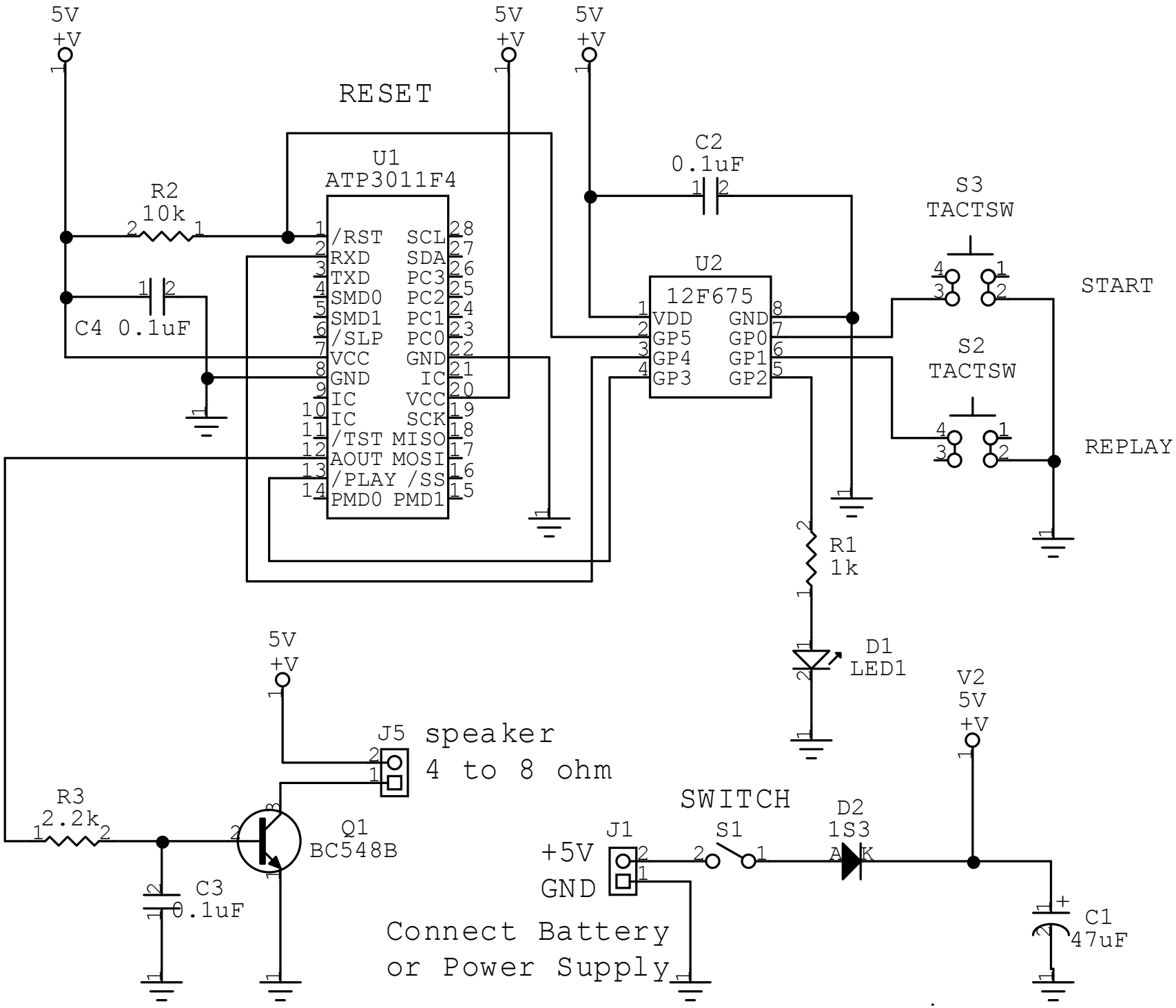
5V
+V
RESET
U1
ATP3011F4
/RST
RXD
TXD
SMD0
SMD1
/SLP
VCC
GND
IC
IC
/TST
AOUT
/PLAY
PMD0
SCL
SDA
PC3
PC2
PC1
PC0
GND
IC
VCC
SCK
MISO
MOSI
/SS
PMD1
R2
10k
C4 0.1uF
C2
0.1uF
U2
12F675
VDD
GP5
GP4
GP3
GND
GP0
GP1
GP2
S3
TACTSW
START
S2
TACTSW
REPLAY
R1
1k
D1
LED1
V2
5V
+V
J5 speaker
4 to 8 ohm
R3
2.2k
Q1
BC548B
C3
0.1uF
SWITCH
J1
+5V
GND
S1
D2
1S3
C1
47uF
Connect Battery
or Power Supply