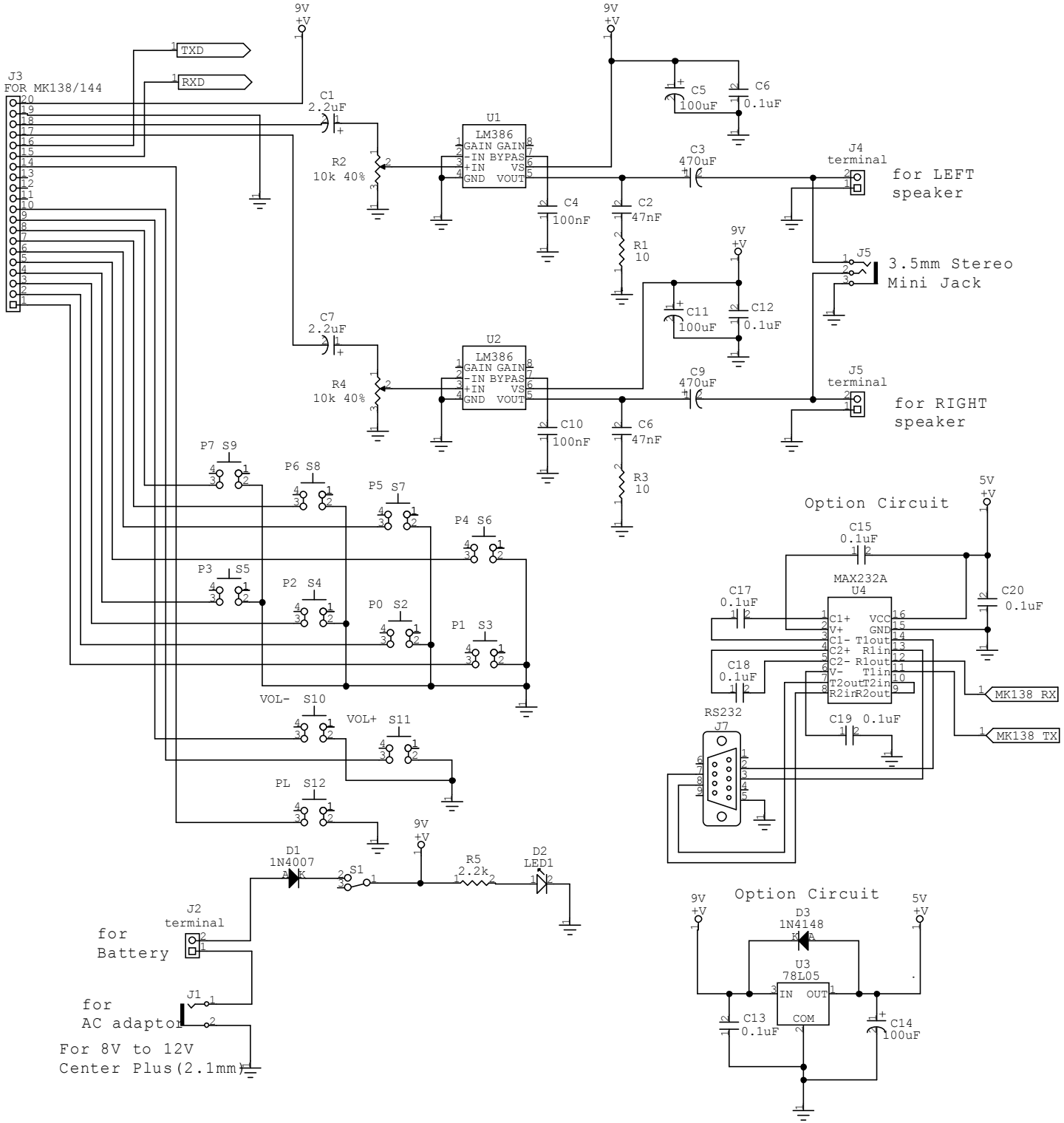
J3
FOR MK138/144
TXD
RXD
9V
+V
C1
2.2uF
R2
10k 40%
U1
LM386
GAIN GAIN
-IN BYPAS
+IN VS
GND VOUT
C4
100nF
C2
47nF
R1
10
C5
100uF
C6
0.1uF
C3
470uF
J4
terminal
for LEFT
speaker
J5
3.5mm Stereo
Mini Jack
C11
100uF
C12
0.1uF
C7
2.2uF
R4
10k 40%
U2
LM386
GAIN GAIN
-IN BYPAS
+IN VS
GND VOUT
C10
100nF
C6
47nF
R3
10
C9
470uF
J5
terminal
for RIGHT
speaker
P7 S9
P6 S8
P5 S7
P4 S6
P3 S5
P2 S4
P0 S2
P1 S3
VOL- S10
VOL+ S11
PL S12
D1
1N4007
S1
R5
2.2k
D2
LED1
J2
terminal
for
Battery
J1
for
AC adapter
For 8V to 12V
Center Plus(2.1mm)
Option Circuit
5V
+V
C15
0.1uF
MAX232A
U4
C1+ VCC
V+ GND
C1- T1out
C2+ R1in
C2- R1out
V- T1in
T2out T2in
R2in R2out
C17
0.1uF
C18
0.1uF
C20
0.1uF
C19 0.1uF
MK138 RX
MK138 TX
RS232
J7
Option Circuit
D3
1N4148
U3
78L05
IN OUT
COM
C13
0.1uF
C14
100uF