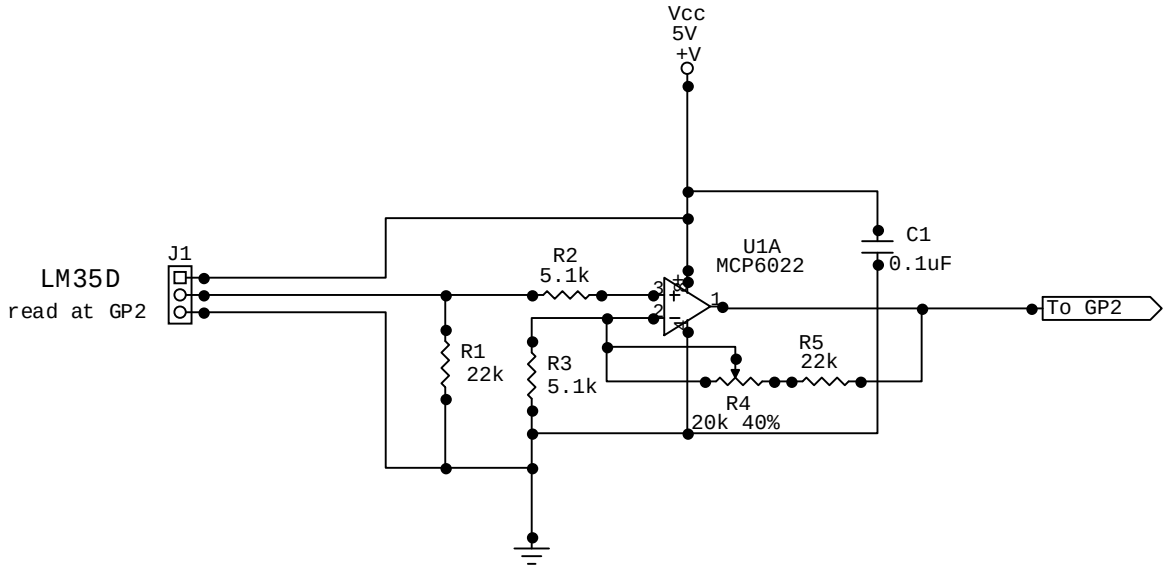
Vcc
5V
+V
LM35D
read at GP2
J1
R2
5.1k
U1A
MCP6022
C1
0.1uF
To GP2
R1
22k
R3
5.1k
R5
22k
R4
20k 40%